ONLINE SELECTION TOOL
www.airselect.nl

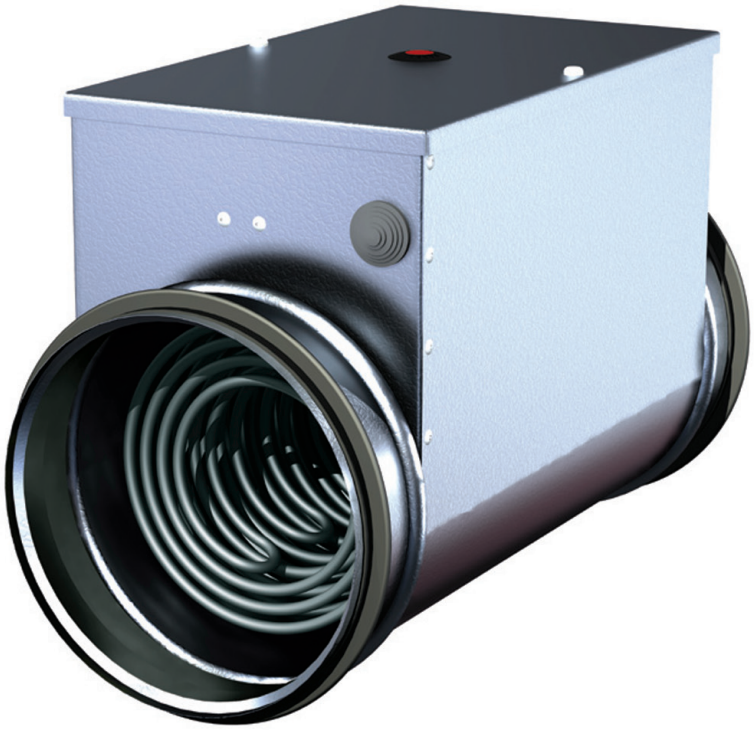

CIRCULAR ELECTRIC DUCT HEATER

NHOP TYPE

BARCOL-AIR
AIR DISTRIBUTION

Composition type designation:

N - H - O - P - T - O - O

N Position 1: **Product group**

N = Air volume control units

H Position 2: **Function**

H = suited for electric reheating

O Position 3: **Controls (manufacturar)**

O = standard
1 = non standard

P Position 4: **Outlet**

P = circular in- and outlet

T Position 5: **Reheat coil**

E = 230 V AC / 1 ph 1-stage type (on/off control)
H = 400 V AC / 3 ph 1-stage type (on/off control)
J = 400 V AC / 3 ph 2-stage type (on/off control)
T = 230 V AC with 0-10 V control (modulating control) (thyristor)
V = 400 V AC with 0-10 V control (modulating control) (thyristor)

O Position 6: **Controls explanation**

O = no addition
P = differential pressure switch
K = internal contactor (only in combination with the 0 ... 10V control)

O Position 7: **Sensor**

O = not applicable

Ordering example:

N	H	O	P	T	O	O	2	0	0	2	.	0	K	W	V
Type							Diameter			Electric heater capacity					Addition

Ordering information:

Standard terminals:

- quantity of terminals
- complete 7 digit code
- terminal size or model

Non standard terminals:

- for non standard terminals a full description and/or drawing are requested

Circular electric duct heater
Technical data

Type NHOP...

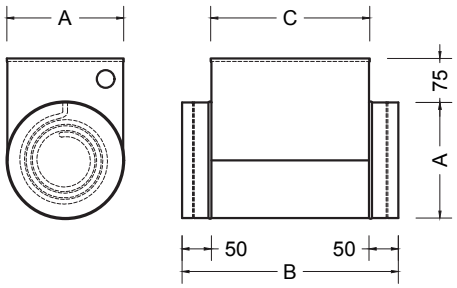

1. Standard

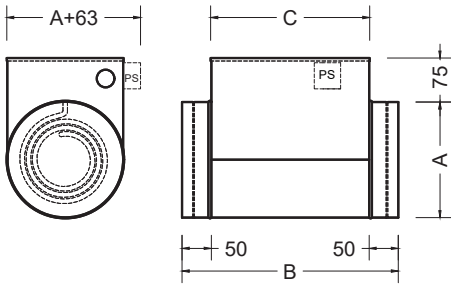

2. Version with PS

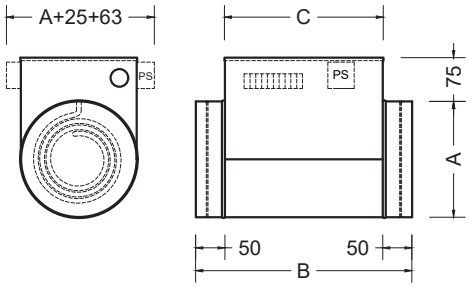

3. Version with PS and thyristor for modulating control

PS = differential pressure switch option

Application

- Circular electric duct heaters type NHOP... are designed to heat treated air of commercial or industrial applications in ventilation systems. The electric heaters are with built-in temperature controllers.

Technical information

Properties:
- Maximum output temperature 50°C.

Construction:
- Casing is made of aluzinc coated steel which is high temperature proof, has excellent thermal reflectivity, good corrosion resistance at high temperatures, excellent resistance to surface corrosion. The casing is provided with rubber seals for air tight duct connection.
- Heating elements are made of high quality stainless steel AISI 304. The heater has 2 built-in thermostats for overheat protection. Casing degree of protection is IP44.

Optional:
- Internal contactor:
  For overheat thermostat control.
- Differential pressure switch:
  For air flow detection.

Installation:
- Casing is provided with rubber seals for air tight duct connection.
- Heaters can be installed vertically or horizontally.

Regular type

- NHOPEOO:
  Circular electric duct heater,
  1 stage 230 V, suited for on/off control.
- NHOPHOO:
  Circular electric duct heater,
  1 stage 400 V, suited for on/off control.
- NHOPJOO:
  Circular electric duct heater,
  2 stage 400 V, suited for on/off control.
- NHOPTOO:
  Circular electric duct heater,
  230 V, 0-10 V modulating control.
- NHOPVOO:
  Circular electric duct heater,
  400 V, 0-10 V modulating control.

The table on the next page shows which models and electric powers are available.

Specify as

Example:
The Barcol-Air circular electric duct heaters are equipped with SS304 elements and automatic reset clixons (50 °C) and manual reset clixon (100 °C).

It can be reset manually by pushing the button on top of the casing. The electric duct heaters shall be supplied as one piece.

Barcol-Air type:	NHOPEOO, model 200
Capacity:	2000 W
Power supply:	230 V/1 ph
No. of stages:	1

Controls

Control O - No addition
In this version no additional control is provided in the unit. Additional components and/or controls may be required for proper operation. See the corresponding connection diagram for the desired configuration for this.

Control P -
Differential Pressure Switch
In this version, the electrical reheating battery is provided with a differential pressure switch. The differential pressure switch is intended for detecting the air pressure / minimum air volume before the heater is in operation. The differential pressure switch is internally connected to the same protection loop to which the thermal protection is also coupled.

Position 6: Control K - Relay
In this version, the electrical re-heater battery is equipped with a relay, which is intended for external enable/blocking control.
In addition, the relay switches off the electric heater when the thermal protection is activated. The relay is internally connected to the same protection loop to which the thermal protection is also coupled.

Dimensions

Model	A	B	C
100	98	370	270
125	123	370	270
160	158	370	270
200	198	370	270
250	248	370	270
315	313	370	270
355	353	370	270
400	398	370	270

Dimensions extra capacity

Model	A	B	C
315 (P = 12kW)	313	500	400
355 (P = 12kW)	353	500	400
400 (P = 12kW)	398	500	400
400 (P > 12kW)	398	620	520

Notes:
1. All dimensions are in mm.
2. Other dimensions available upon request.

Type NHOP...

Selection example

Given data:

Model size: 125
Air volume (**min. velocity 1,5 m/s**): 160 m³/h
Air entering temperature: 15 °C
Desired air leaving temperature: 35 °C

Requested:

The capacity of the electric duct heater.

Result:

The requested air temperature increase (ΔT)
35 – 15 = 20 °C

Following the selection table, model 125 at 168 m³/h results in ΔT 21 °C at a capacity of 1,2 kW. This is more than requested. An electric duct heater of 1,2 kW will be required.

The minimal requested capacity can also be calculated with the following formula:

P = 0,335 * Qv * Δ T

P = 0,335 * 160 * 20 = 1072 Watt

Available models and capacity ranges

Model	Min. air volume (m³/h)	Power (V/50Hz)	Capacity (kW)
100	45	1~230	0,3 / 0,6 / 0,9 / 1,2 / 1,5 / 1,8
125	70	1~230	0,3 / 0,6 / 0,9 / 1,2 / 1,5 / 1,8 / 2,4 / 3,0
160	110	1~230	0,3 / 0,6 / 0,9 / 1,0 / 1,2 / 1,8 / 2,0 / 2,4 / 3,0
		3~400	3,0 / 6,0
200	170	1~230	0,3 / 0,6 / 0,9 / 1,2 / 1,5 / 2,0 / 2,4 / 3,0 / 5,0 / 6,0
		3~400	3,0 / 6,0 / 9,0
250	265	1~230	0,3 / 0,6 / 0,9 / 1,0 / 1,2 / 1,5 / 2,0 / 2,4 / 3,0 / 5,0 / 6,0
		3~400	3,0 / 6,0 / 9,0 / 12,0
315	425	1~230	1,2 / 1,8 / 2,0 / 2,4 / 3,0 / 4,0 / 5,0
		3~400	6,0 / 9,0 / 12,0 / 15,0 / 18,0
355	535	1~230	1,2 / 1,8 / 2,0 / 2,4 / 3,0 / 4,0 / 5,0
		3~400	6,0 / 9,0 / 12,0 / 15,0 / 18,0
400	680	1~230	3,0 / 4,0 / 5,0 / 6,0
		3~400	6,0 / 9,0 / 12,0 / 15,0 / 18,0 / 24,0

Electrical heaters conforms to requirements of standards IEC 60335-2-30: 1996, EN 600335-2-30: 1999, EN 61010-1+A2: 2000, EN 50081-2: 1995, EN 55011: 1999+A1: 2001 and carries CE mark.

Overheat protection

All NHOP.OO duct heaters has two-stage overheat protection: the first stage switches on when the temperature reaches 50°C (resets automatically), the second stage switches on when the temperature reaches 100°C (is reset manually with pushbutton on the casing). The duct heaters have no internal temperature controller. External heating controllers are used in this case. (A minimum air velocity of 1,5 m/s is necessary for safety and proper operation.)

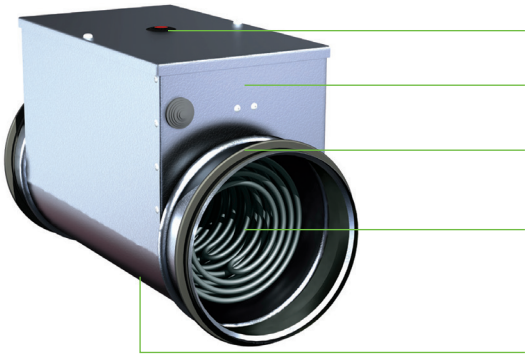

Fig. 1. Installation and electrical connection

Fig. 1. Installation and electrical connection Electrical duct heaters NHOP can be installed horizontally in any position except with the electrical connection box downward. Vertically only if the air flow direction is upwards (see Fig. 1).

Heaters installation positions

Heaters can't be installed in explosive and aggressive substances environment. Heaters can be used only for clean air heating or preheating. Heaters intended only for indoor installation. If the heater is installed in such way that accidental contact with the heating elements is possible a protective cover must be installed. The air velocity in the duct must be minimal 1,5 m/s.

Important

The installation to the main power supply may only be wired by a competent electrician. The power supply cable must be selected in the ratio with the power of the heater. When installing these heaters, the standards and regulations in your country must be strictly followed. When installing this product ensure the power source is adequately protected by means of a suitably-rated fuse or automatic circuit breaker (not included), to enable the installer to cut all power.

Automatic circuit breaker must be selected in compliance with the power and nominal current (see the electrical rating label on the heater casing) of the heater and should have characteristic B. Connect the heater to the main power supply, check that the voltage, frequency, power and current are the same as those indicated on the electrical rating label. The heater must have earth connection.

(Fig. 1)

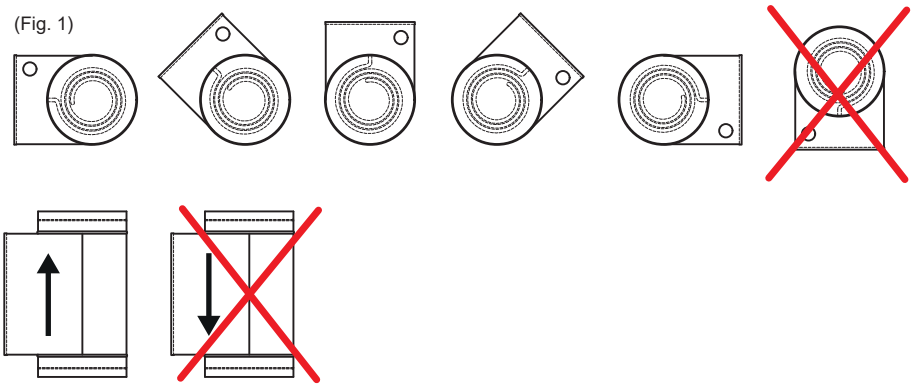

Type NHOP.OO

Selection table NHOP.OO

Model	Air velocity	Air volume			Air side temperature differance because of electric reheat coil									
					1 phase / 230 VAC						3 phase / 400 VAC			
					0.3 kW	0.9 kW	1.2 kW	1.8 kW	2.0 kW	2.4 kW	6 kW	9 kW	12 kW	18 kW
	m/s	l/s	CFM	m^3/h	Δ T °C	Δ T °C	Δ T °C	Δ T °C	Δ T °C	Δ T °C	Δ T °C	Δ T °C	Δ T °C	Δ T °C
100	2	15	31	53	17									
	4	29	62	106	8	25	34							
	6	44	94	160	6	17	22							
	8	59	125	213	4	13	17							
	10	74	156	266	3	10	13							
125	2	23	49	84	11	32								
	4	47	99	168	5	16	21	32						
	6	70	149	253	4	11	14	21						
	8	94	198	337	3	8	11	16						
	10	117	248	421	2	6	9	13						
160	2	39	82	139		19	26	39						
	4	78	164	279		10	13	19		26				
	6	116	246	418		6	9	13		17				
	8	155	328	558		5	6	10		13	32			
	10	194	410	697		4	5	8		10	26			
200	2	61	129	219		12	16		27	33				
	4	122	258	439		6	8		14	16				
	6	183	387	658		4	5		9	11	27			
	8	244	516	878		3	4		7	8	20	31		
	10	305	645	1097			3		5	7	16	24		
250	2	96	203	345			10		17	21				
	4	192	406	690			5		9	10	26			
	6	288	609	1035			3		6	7	17	26	35	
	8	383	812	1380					4	5	13	19	26	
	10	479	1015	1725					3	4	10	16	21	
315	2	153	324	550			7		11	13	33			
	4	306	648	1101			3		5	7	16	24	33	
	6	459	971	1651					4	4	11	16	22	
	8	612	1295	2202					3	3	8	12	16	
	10	764	1619	2752						3	7	10	13	
355	2	195	324	701			5		9	10	26			
	4	389	648	1401			3		4	5	13	19	26	
	6	584	971	2102					3	3	9	13	17	
	8	779	1295	2803						3	6	10	13	
	10	973	1619	3503							5	8	10	
400	2	248	524	891							20	30		
	4	495	1049	1783							10	15	20	30
	6	743	1573	2674							7	10	13	20
	8	990	2097	3565							5	8	10	15
	10	1238	2621	4456							4	6	8	12

1. The recommended leaving air temp. is 35 °C. You should take into account; space height, air velocity, type of diffuser and diffuser position.

2. For the selection of a standard application electric reheat coil in a Barcol-Air VAV- or CAV-terminal, see selection example on the previous page.

3. For non-standard applications and/or selection, contact our technicians.

Note:
The capacities shown in the table are no room capacities but coil capacities.
The room capacity can be calculated by using the following formula:

$P_{space} = 0.335 \times Qv\ (m^3/h) \times (T_{air\ out\ (table)} - T_{space})$.

Circular electric duct heater

Wiring diagram

N - H - O - P - E - O - O (230Vac - On/Off)

≤ 3.6kW

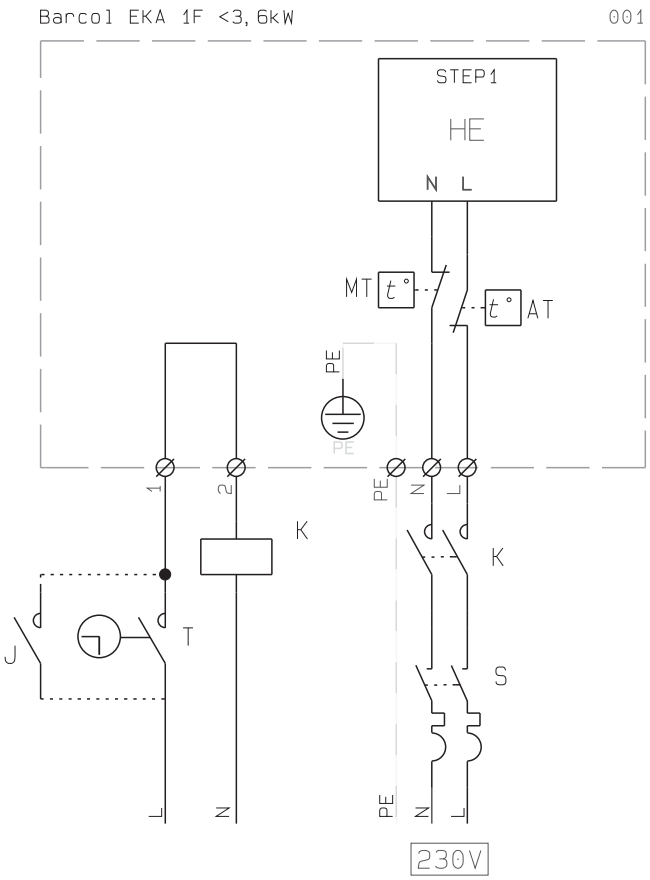

MT - Thermostat with manual reset
AT - Thermostat with automatic reset
HE1-HE3 - Heating elements
K - User side contactor
S - User side circuit breaker
T, J - User control switches

> 3.6kW

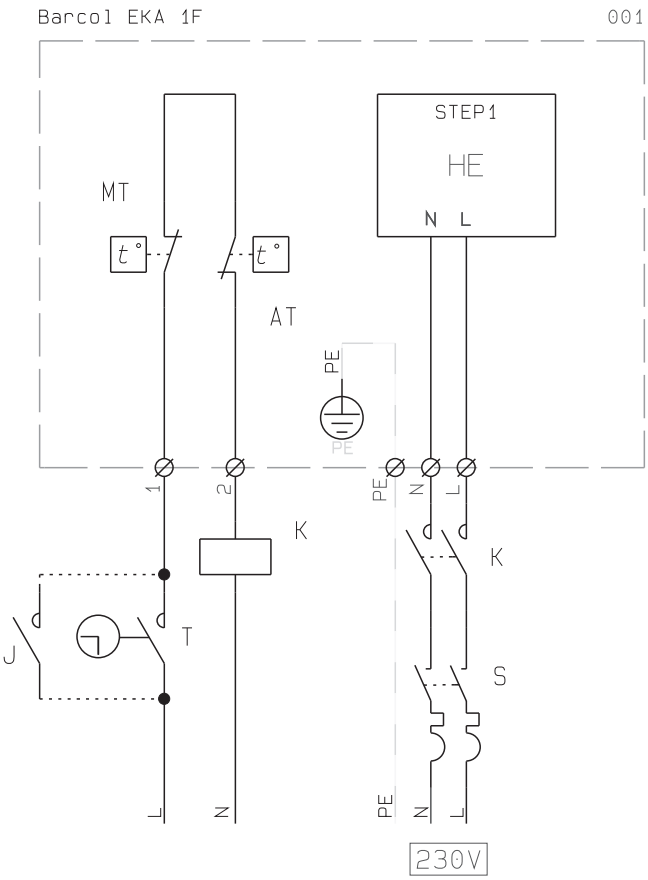

MT - Thermostat with manual reset
AT - Thermostat with automatic reset
HE1-HE3 - Heating elements
K - User side contactor
S - User side circuit breaker
T, J - User control switches

Scope of delivery is within the dotted box, components outside the box are a minimum requirement for proper operation.

N - H - O - P - E - P - O (230Vac - On/Off incl. differential pressure switch)

≤ 3.6kW

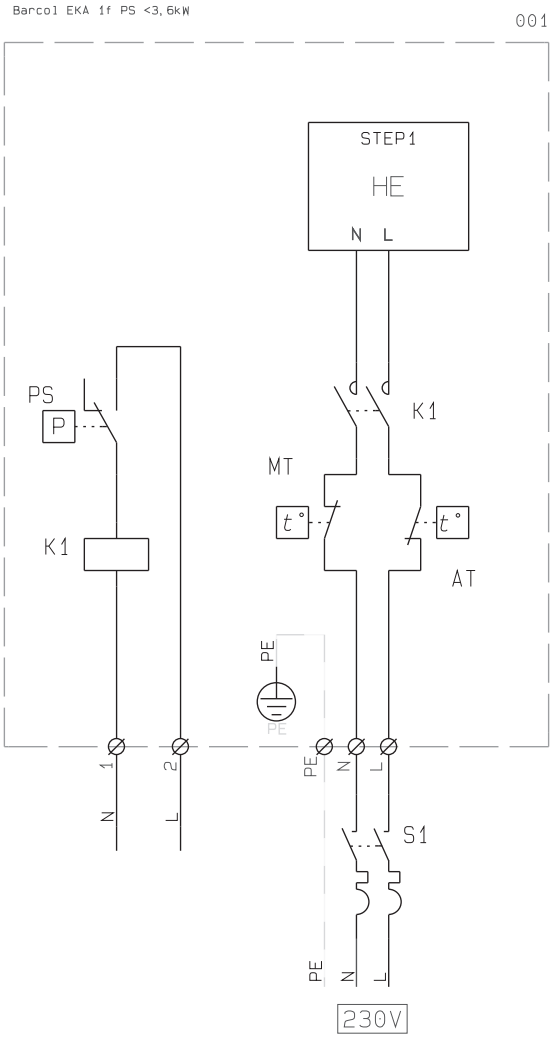

MT - Thermostat with manual reset
AT - Thermostat with automatic reset
HE - Heating elements
K1 - Internal Contactor/Relay
S - User side circuit breaker
PS - Differential pressure switch

> 3.6kW

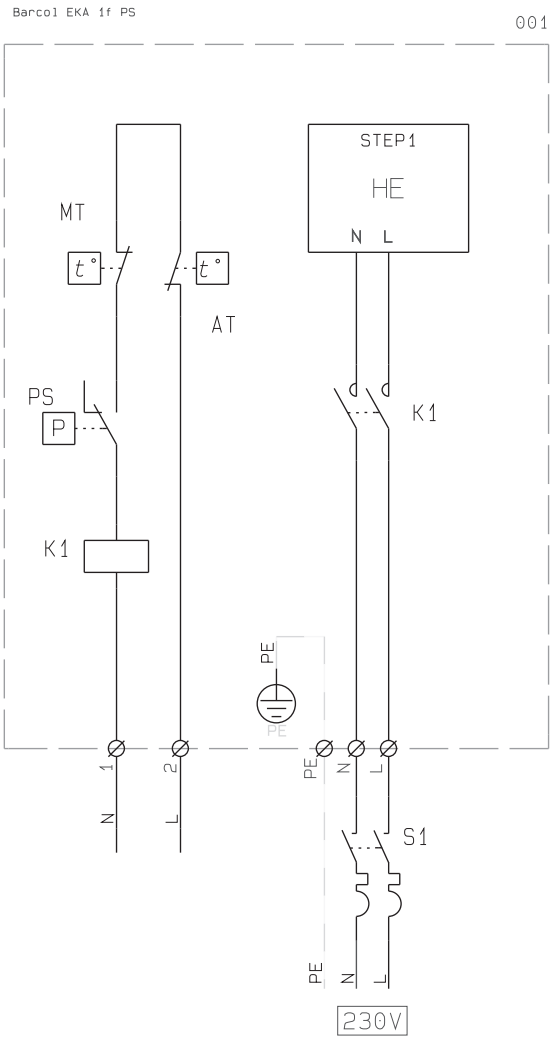

MT - Thermostat with manual reset
AT - Thermostat with automatic reset
HE - Heating elements
K1 - Internal Contactor/Relay
S - User side circuit breaker
PS - Differential pressure switch

Scope of delivery is within the dotted box, components outside the box are a minimum requirement for proper operation.

Circular electric duct heater

Wiring diagram

N - H - O - P - H - O - O (400Vac - On/Off - 1-step)

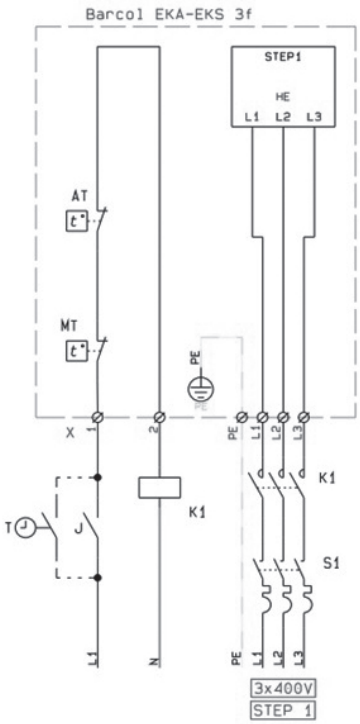

MT - Thermostat with manual reset
AT - Thermostat with automatic reset
HE - Heating elements
K1 - User side Overheat protection contactor
S1 - User side circuit breakers
T, J - User Control switches

N - H - O - P - J - O - O (400Vac - On/Off - 2 step)

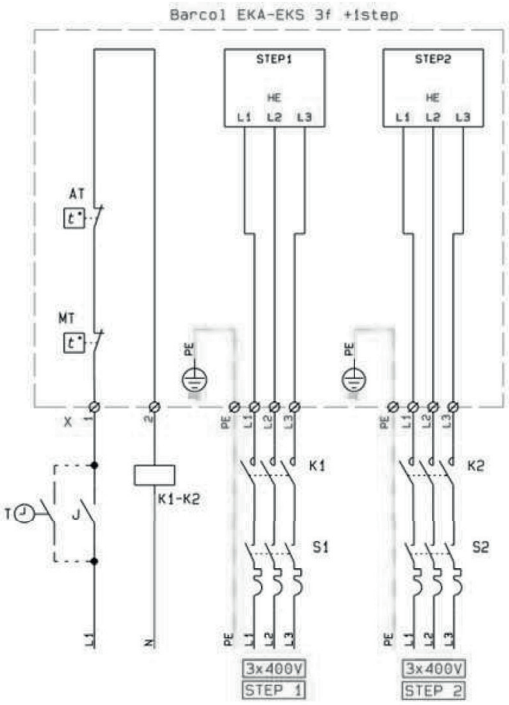

MT - Thermostat with manual reset
AT - Thermostat with automatic reset
HE - Heating elements
K1-K2 - User side Overheat protection contactor
S1-S2 - User side circuit breakers
T, J - User Control switches

Scope of delivery is within the dotted box, components outside the box are a minimum requirement for proper operation.

N - H - O - P - H - P - O (400Vac - On/Off 1-step incl. differential pressure switch)

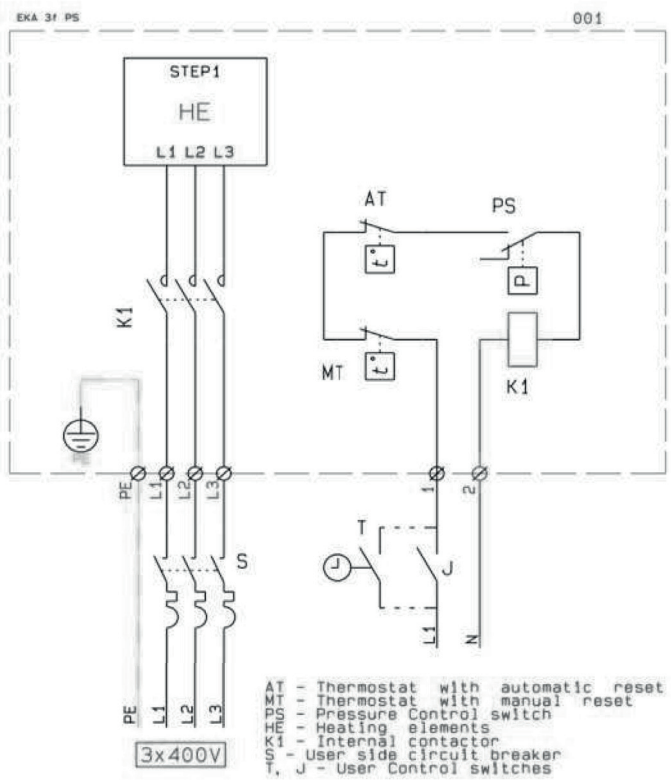

Scope of delivery is within the dotted box, components outside the box are a minimum requirement for proper operation.

Circular electric duct heater

Wiring diagram

N - H - O - P - T - O - O (230Vac - 0..10V control)

≤ 3.6kW

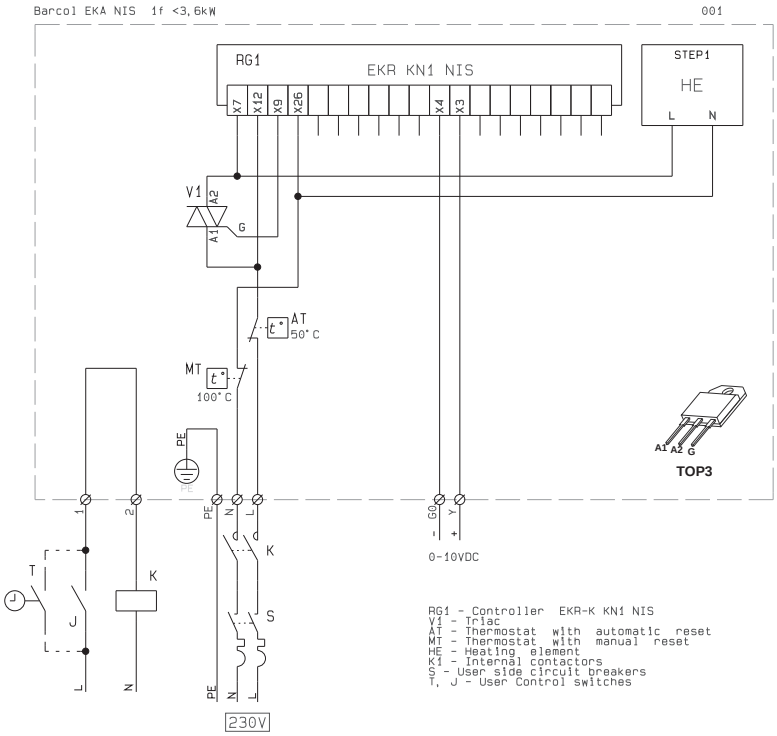

> 3.6kW

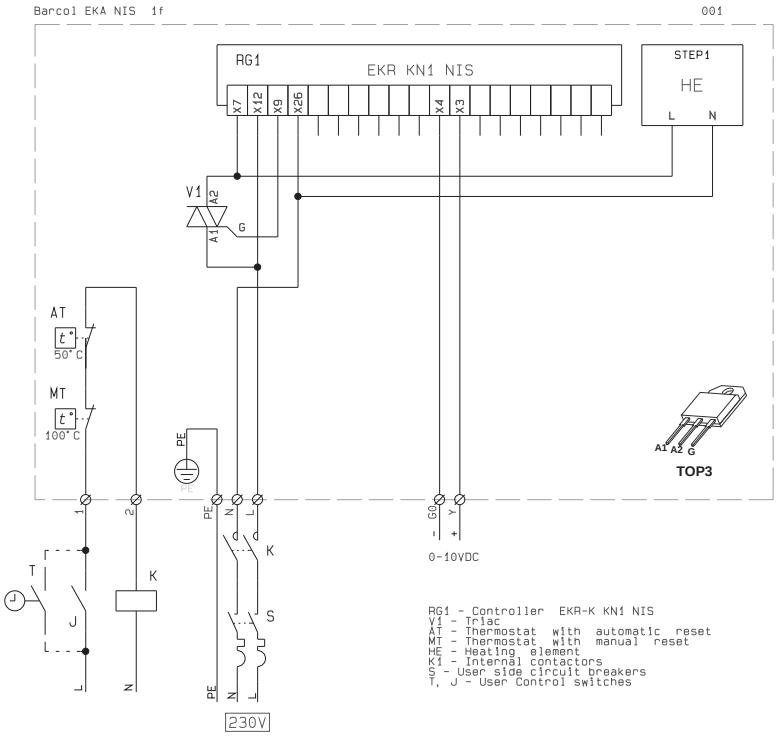

Scope of delivery is within the dotted box, components outside the box are a minimum requirement for proper operation.

N - H - O - P - T - P - O (230Vac - 0..10V control incl. differential pressure switch)

≤ 3.6kW

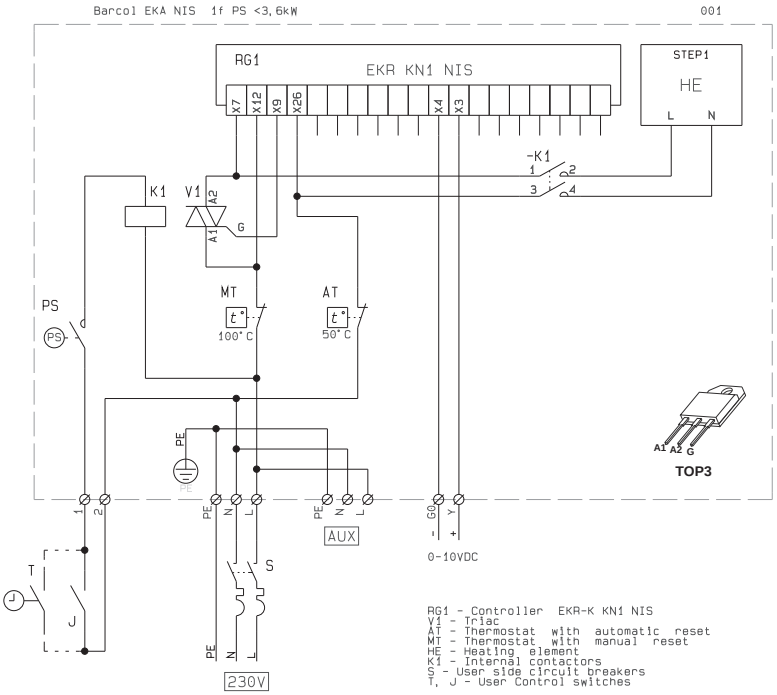

> 3.6kW

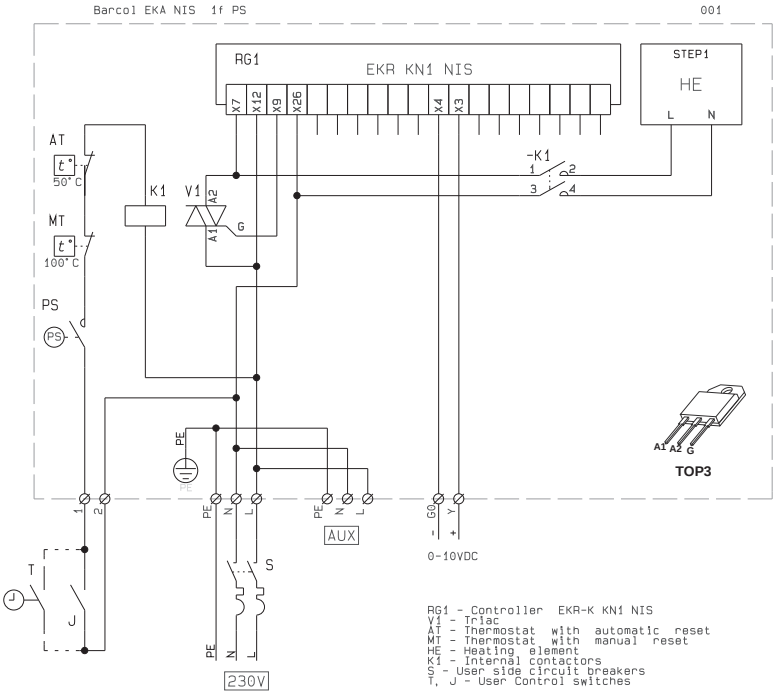

Scope of delivery is within the dotted box, components outside the box are a minimum requirement for proper operation.

Circular electric duct heater

Wiring diagram

N - H - O - P - T - K - O (230Vac - 0..10V control incl. internal contactor)

≤ 3.6kW

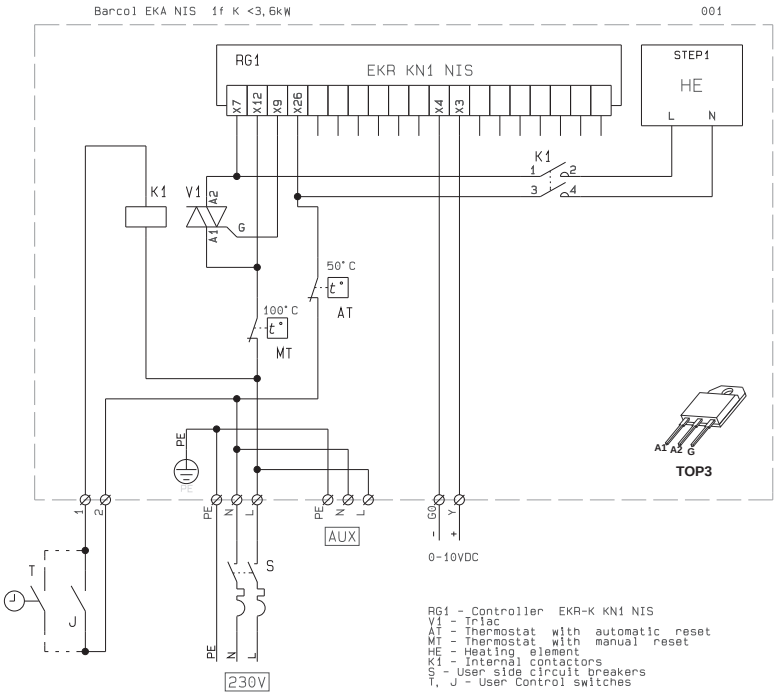

> 3.6kW

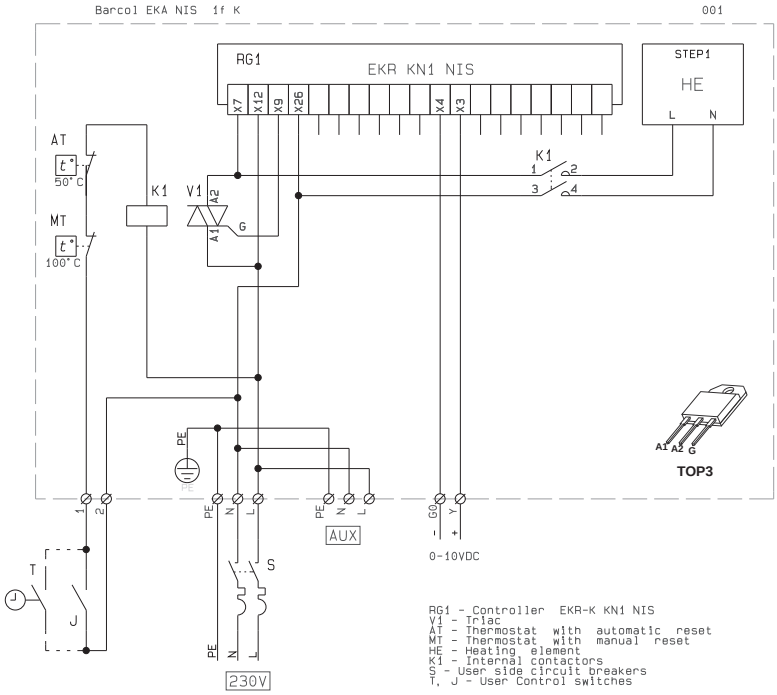

Scope of delivery is within the dotted box, components outside the box are a minimum requirement for proper operation.

N - H - O - P - V - O - O (400Vac - 0..10V control)

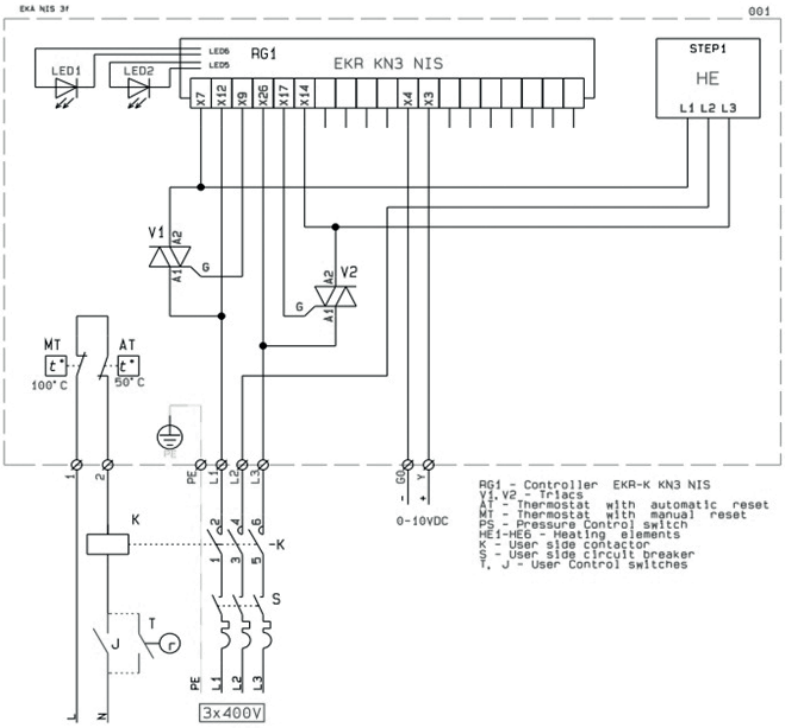

N - H - O - P - V - P - O (400Vac - 0..10V control incl. differential pressure switch)

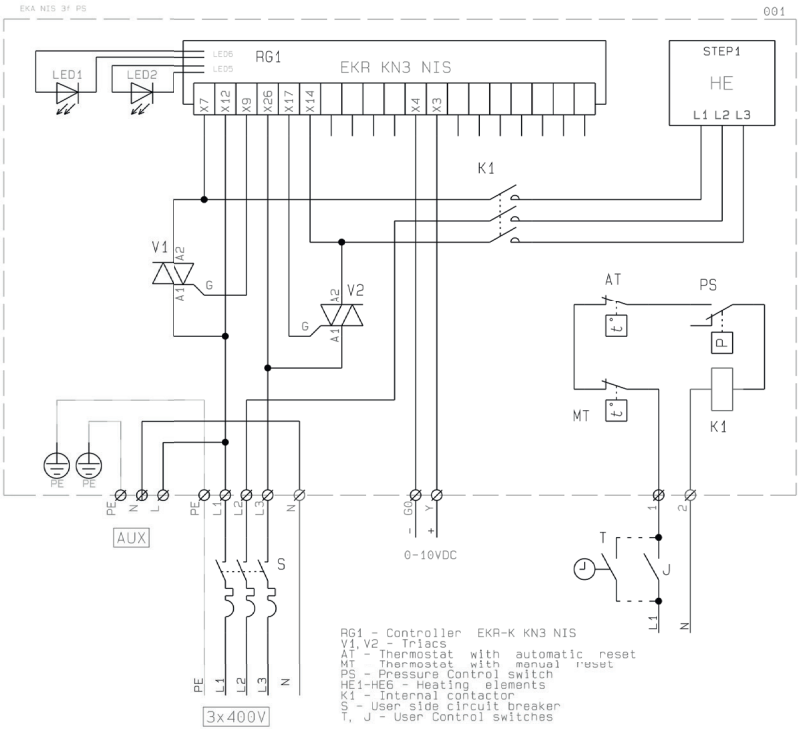

Scope of delivery is within the dotted box, components outside the box are a minimum requirement for proper operation.

Circular electric duct heater

Wiring diagram

N - H - O - P - V - K - O (400Vac - 0..10V control incl. internal contactor)

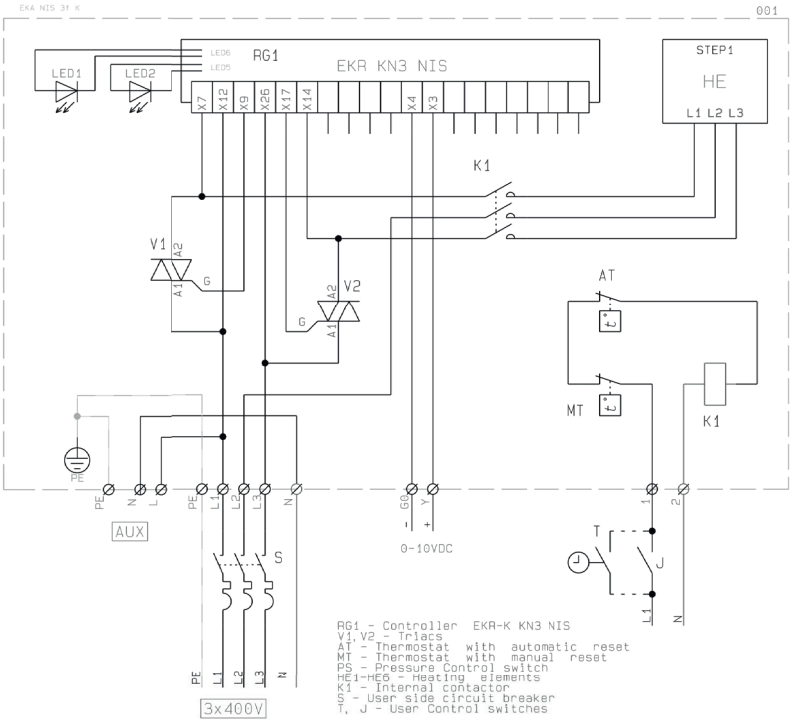

Scope of delivery is within the dotted box, components outside the box are a minimum requirement for proper operation.

BARCOL-AIR
AIR DISTRIBUTION

OUR TECHNOLOGY | YOUR WELLBEING

BARCOL-AIR | AIR DISTRIBUTION
Cantekoogweg 10-12 - 1442 LG Purmerend, The Netherlands
T +31 (0)299 689 300 | **E** export@barcol-air.nl

WWW.BARCOL-AIR.NL